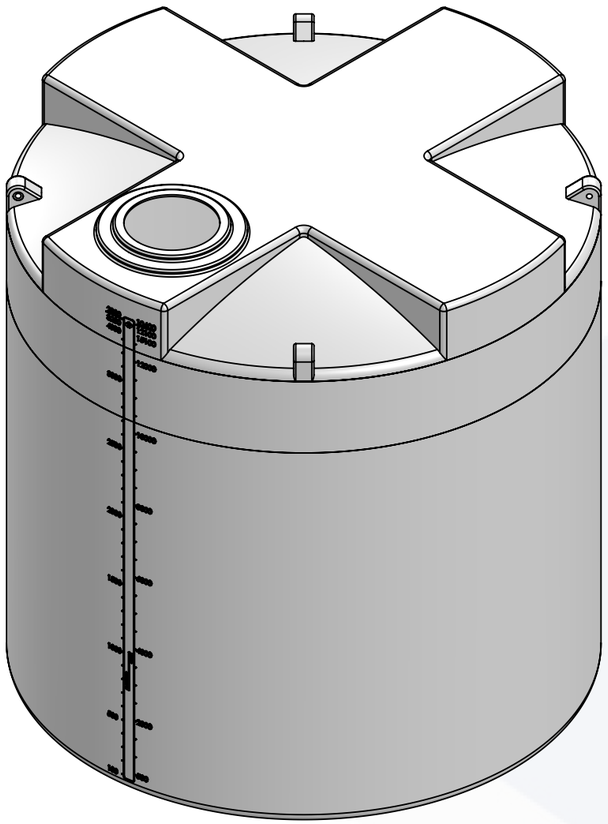

ISOMETRIC VIEW (FRONT)

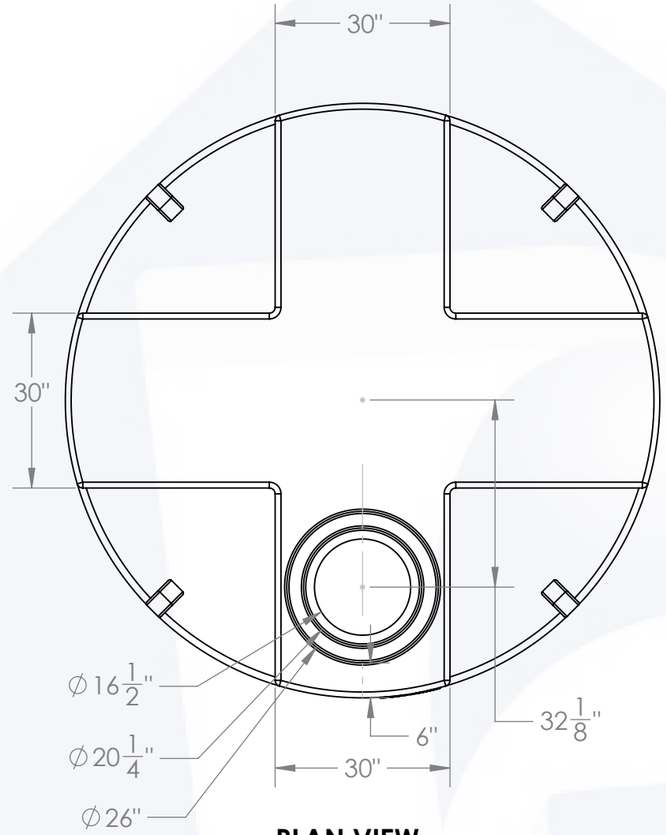

PLAN VIEW

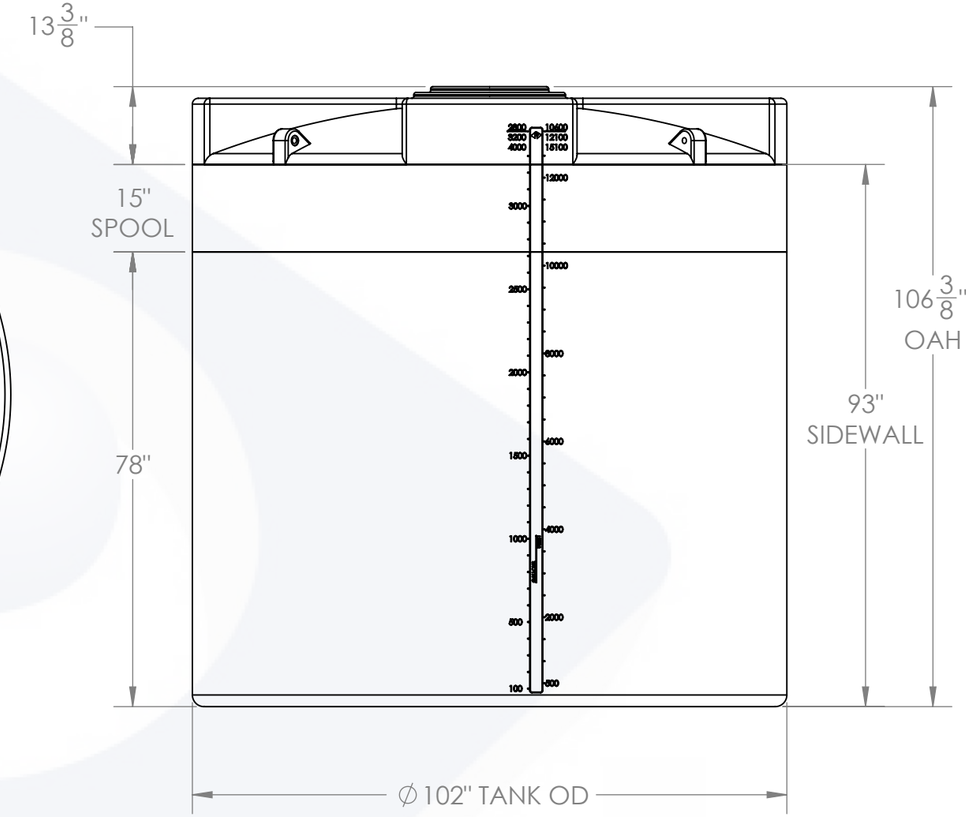

FRONT VIEW

3200G PROCHEM PLUS DOME TOP Ø102 x 107	PART NUMBER	
	PROCESS CHEMICAL (NATURAL)	POTABLE WATER (BLACK)
LPE (1.5)	01-35765	N/A
LPE (1.9)	01-35766	N/A
XLPE (1.5)	01-35767	N/A
XLPE (1.9)	01-35768	N/A
ALTERNATIVE MATERIALS, COLOR, AND ACCESSORIES ARE AVAILABLE. CALL FOR ADDITIONAL INFO		

NOTES:

1. CAPACITY: 3524 GAL. MAX / 3229 GAL. SIDEWALL
2. APPROXIMATE WEIGHT: 650 LBS 1.0/ 710 LBS 1.5/ 810 LBS 1.9
3. TANK MATERIAL: HDLPE W/ UV INHIBITOR OR XLPE W/ UV INHIBITOR
4. SERVICE PRESSURE: ATMOSPHERIC

PROPRIETARY AND CONFIDENTIAL

THE INFORMATION CONTAINED IN THIS DRAWING IS THE SOLE PROPERTY OF PEABODY ENGINEERING. ANY REPRODUCTION IN PART OR AS A WHOLE WITHOUT THE WRITTEN PERMISSION OF PEABODY ENGINEERING IS PROHIBITED.

UNLESS OTHERWISE SPECIFIED:
DIMENSIONS ARE IN INCHES
TOLERANCES: ±1/4"
ANGULAR: ± .5°
ONE PLACE DECIMAL: ± .25
TWO PLACE DECIMAL: ± .125
THREE PLACE DECIMAL: ± .063

TANK MATERIAL: **HDLPE**

INNER TANK S/N:

OUTER TANK S/N:

CUSTOMER PO#

DO NOT SCALE DRAWING

	NAME	DATE
DRAWN	JO	02/01/24
CHECKED		
ENG APPR.		
MFG APPR.		
Q.A.		

ALTERNATIVE VERSIONS

AVAILABLE WITH FRP WRAP

CALL FOR PART NUMBERS

PEABODY engineering

PROJECT:

CUSTOMER: **PEABODY STANDARD**

SITE/LOCATION:

DRAWING#:

SIZE **B** | DESC. **3200G PROCHEM PLUS DOME TOP Ø102 x 107** | REV. **G**

SCALE: 1:26

SHEET 1 OF 3