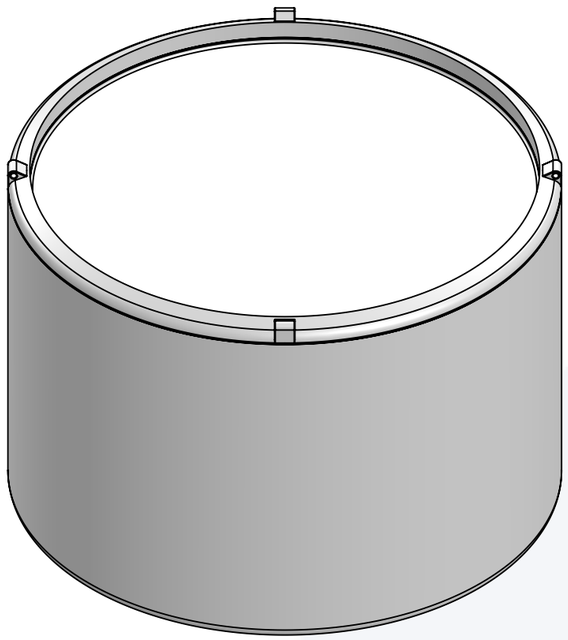

ISOMETRIC VIEW (FRONT)

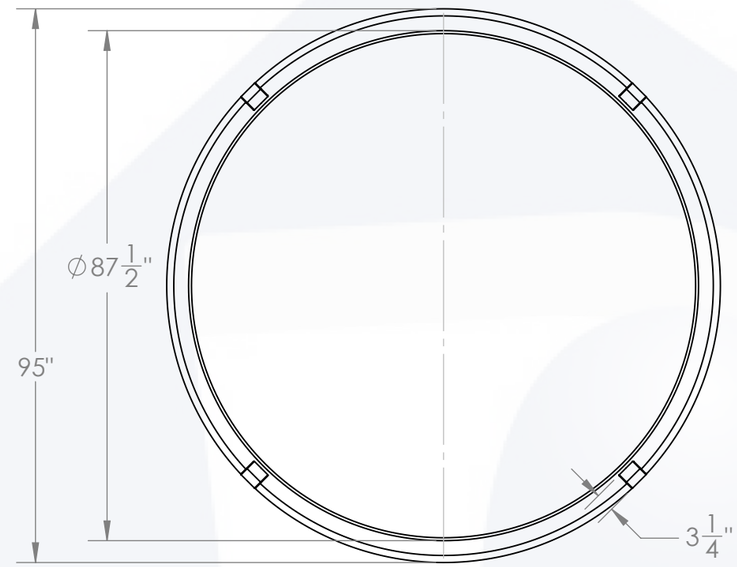

PLAN VIEW

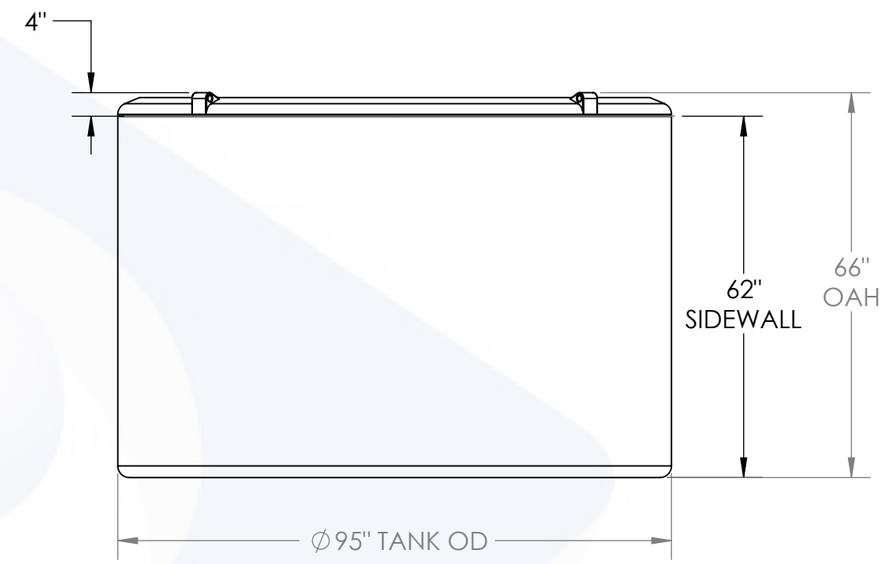

FRONT VIEW

1925G PROCHEM PLUS OT OPEN TOP Ø95 X 66	PART NUMBER	
	PROCESS CHEMICAL (NATURAL)	POTABLE WATER (BLACK)
LPE (1.5)	01-35825	N/A
LPE (1.9)	01-35826	N/A
XLPE (1.5)	01-35827	N/A
XLPE (1.9)	01-35828	N/A
ALTERNATIVE MATERIALS, COLOR, AND ACCESSORIES ARE AVAILABLE. CALL FOR ADDITIONAL INFO		

NOTES:
1. CAPACITY: 1964 GAL. MAX / 1890 GAL. SIDEWALL
2. APPROXIMATE WEIGHT: x LBS 1.0/ x LBS 1.5/ x LBS 1.9
3. TANK MATERIAL: HDLPE W/ UV INHIBITOR OR XLPE W/ UV INHIBITOR
4. SERVICE PRESSURE: ATMOSPHERIC

NOTE:
SECONDARY CONTAINMENT FOR 1750G PROCHEM Ø87

PROPRIETARY AND CONFIDENTIAL
THE INFORMATION CONTAINED IN THIS DRAWING IS THE SOLE PROPERTY OF PEABODY ENGINEERING. ANY REPRODUCTION IN PART OR AS A WHOLE WITHOUT THE WRITTEN PERMISSION OF PEABODY ENGINEERING IS PROHIBITED.

UNLESS OTHERWISE SPECIFIED:
DIMENSIONS ARE IN INCHES
TOLERANCES: ±1/4"
ANGULAR: ± .5°
ONE PLACE DECIMAL: ± .25
TWO PLACE DECIMAL: ± .125
THREE PLACE DECIMAL: ± .063

TANK MATERIAL: HDLPE
INNER TANK S/N:
OUTER TANK S/N:
CUSTOMER PO#

DO NOT SCALE DRAWING

	NAME	DATE
DRAWN	JO	03/20/24
CHECKED		
ENG APPR.		
MFG APPR.		
Q.A.		

ALTERNATIVE VERSIONS
AVAILABLE WITH FRP WRAP
CALL FOR PART NUMBERS

PEABODY engineering

PROJECT:
CUSTOMER: **PEABODY STANDARD**
SITE/LOCATION:
DRAWING#:

SIZE **B** | DESC. **1925 PROCHEM PLUS OT OPEN TOP Ø95 X 66** | REV. **D**

SCALE: 1:26 | SHEET 1 OF 4