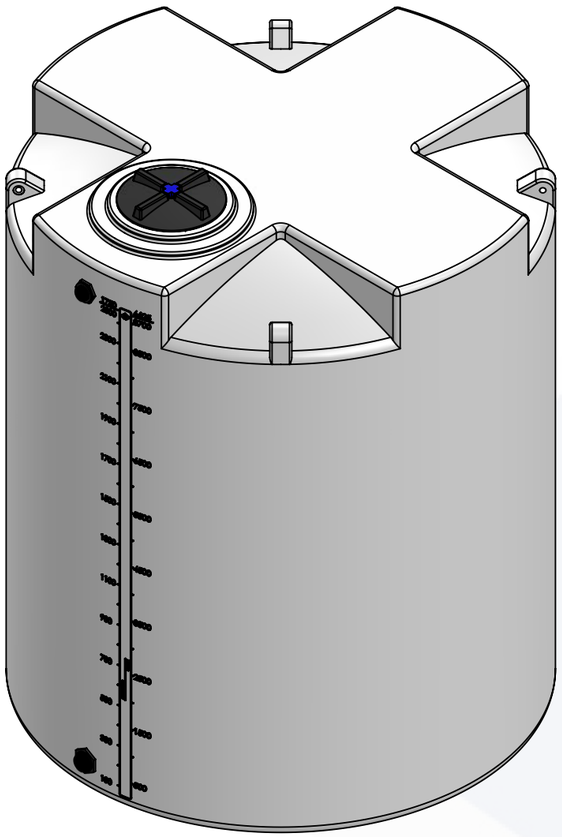

**ISOMETRIC VIEW (FRONT)**

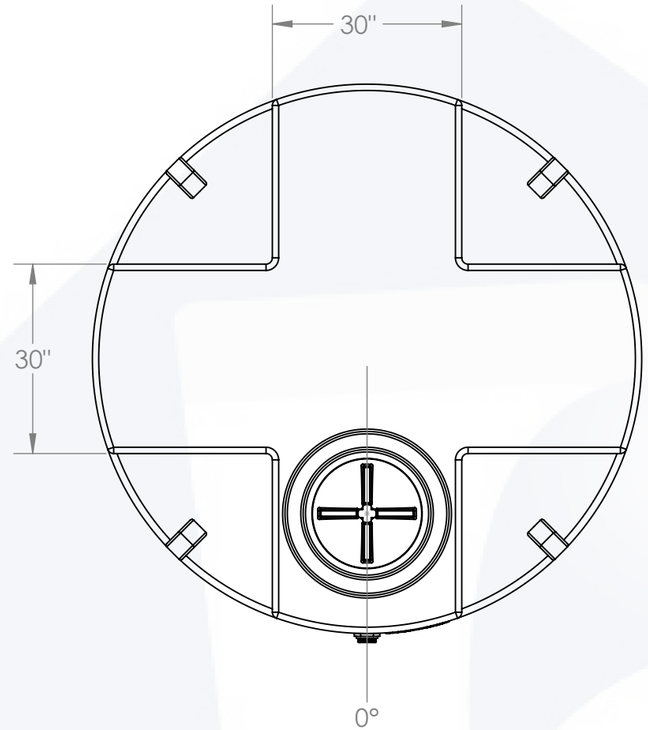


16" TWIST LID (TOP)
1.5" BULKHEAD (SIDE TOP)
2" BULKHEAD (SIDE BOTTOM)

**PLAN VIEW**

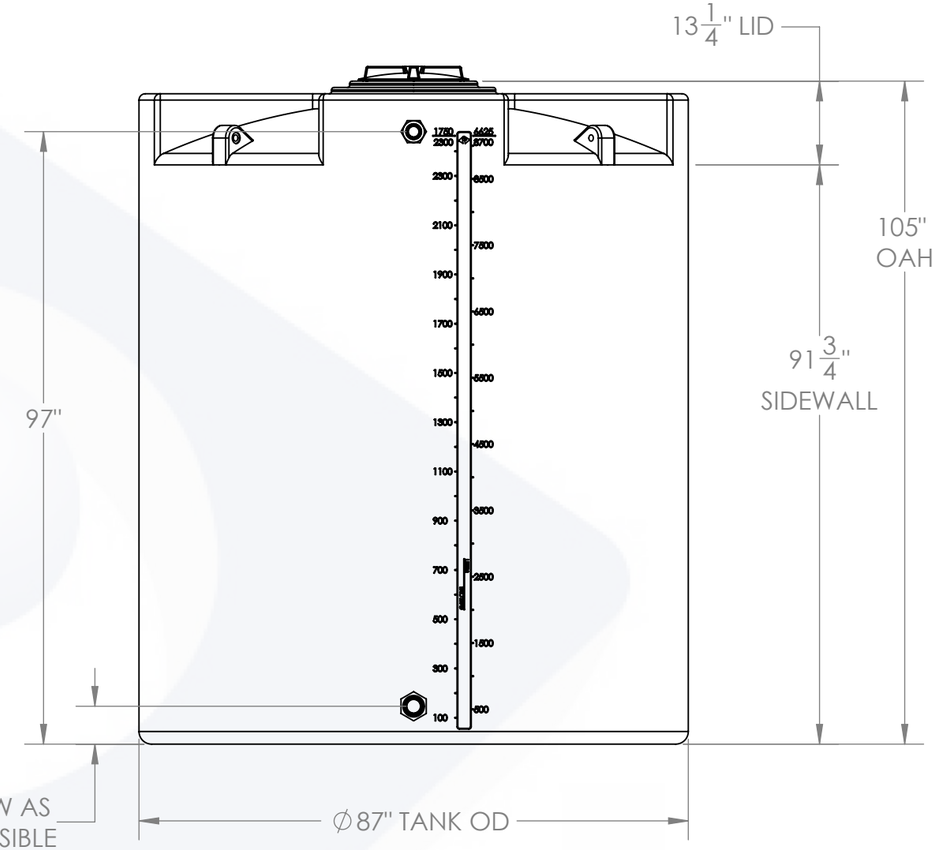


**FRONT VIEW**

| 2300G PROCHEM PLUS POTABLE WATER Ø87 x 105 | PART NUMBER | | | |
|---|---|---|---|---|
| | POTABLE WATER (NATURAL) | POTABLE WATER (BLACK) | POTABLE WATER (GREEN) | POTABLE WATER (DK GRAY) |
| LPE (1.0) | 01-35785BH | 01-35786BH | 01-35787BH | 01-35788BH |
| *ALTERNATIVE MATERIALS, COLOR, AND ACCESSORIES ARE AVAILABLE. CALL FOR ADDITIONAL INFO* | | | | |

**NOTES:**
1. CAPACITY: 2533 GAL. MAX / 2310 GAL. SIDEWALL
2. TANK MATERIAL: HDLPE W/ UV INHIBITOR OR XLPE W/ UV INHIBITOR
3. SERVICE PRESSURE: ATMOSPHERIC

**NOTE:**
**Ø95" 2530G OUTER OPTION AVAILABLE**


**PROPRIETARY AND CONFIDENTIAL**
THE INFORMATION CONTAINED IN THIS DRAWING IS THE SOLE PROPERTY OF PEABODY ENGINEERING. ANY REPRODUCTION IN PART OR AS A WHOLE WITHOUT THE WRITTEN PERMISSION OF PEABODY ENGINEERING IS PROHIBITED.


UNLESS OTHERWISE SPECIFIED:
DIMENSIONS ARE IN INCHES
TOLERANCES: ±1/4"
ANGULAR: ± .5°
ONE PLACE DECIMAL: ± .25
TWO PLACE DECIMAL: ± .125
THREE PLACE DECIMAL: ± .063

TANK MATERIAL: HDLPE
INNER TANK S/N:
OUTER TANK S/N:
CUSTOMER PO#
DO NOT SCALE DRAWING

| | NAME | DATE |
|---|---|---|
| DRAWN | JO | 02/01/24 |
| CHECKED | | |
| ENG APPR. | | |
| MFG APPR. | | |
| Q.A. | | |

**ALTERNATIVE VERSIONS**
**AVAILABLE WITH FRP WRAP**
**CALL FOR PART NUMBERS**

PEABODY engineering

PROJECT:
CUSTOMER: **PEABODY STANDARD**
SITE/LOCATION:
DRAWING#:

SIZE **B** | DESC. **2300G PROCHEM PLUS DOME TOP Ø87 x 105** | REV. **E**

SCALE: 1:24 | SHEET 1 OF 1