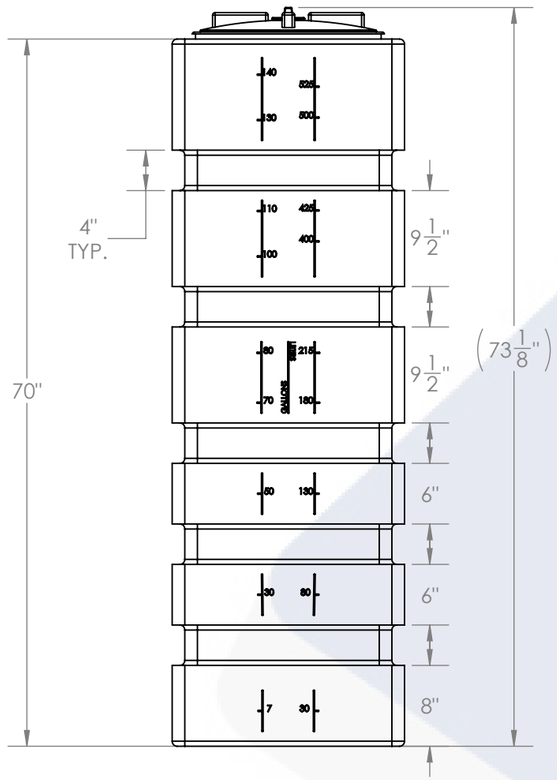

FRONT VIEW

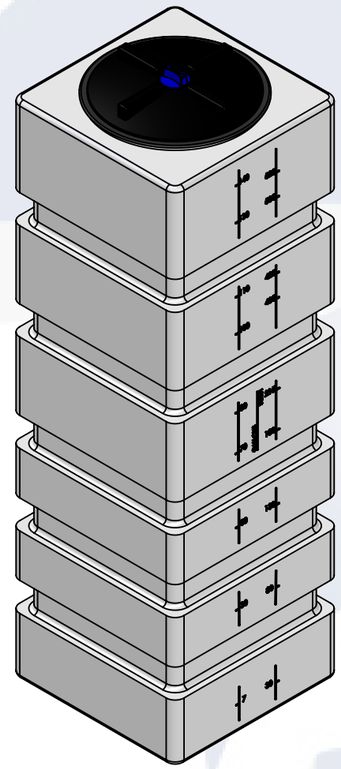

ISOMETRIC VIEW

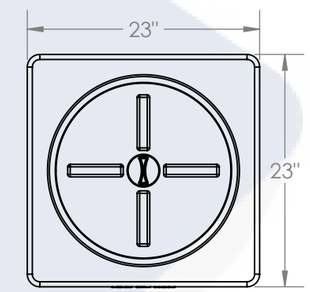

TOP VIEW

140 GAL Prochem® Process Square Tank 23" x 70"	PART NUMBER	
	PROCESS CHEMICAL (NATURAL)	POTABLE WATER (BLACK)
LPE (1.0)	01-34029	01-31868
LPE (1.5)	01-31688	N/A
LPE (1.9)	01-31687	N/A
XLPE (1.9)	01-31693	N/A
ALTERNATIVE MATERIALS, COLOR, AND ACCESSORIES ARE AVAILABLE. CALL FOR ADDITIONAL INFO		

NOTES:

1. CAPACITY: 140 GAL. NOMINAL
2. TANK MATERIAL OPTIONS:
   LPE 1.5, LPE 1.9, XLPE, FDA WATER, PPL, PVDF
3. SERVICE PRESSURE: ATMOSPHERIC
4. NSF/ANSI STANDARD 61 CERTIFIED
5. AVAILABLE W/FRP WRAP
   CONTACT CUSTOMER SERVICE FOR MORE INFO

PROPRIETARY AND CONFIDENTIAL
THE INFORMATION CONTAINED IN THIS DRAWING IS THE SOLE PROPERTY OF PEABODY ENGINEERING. ANY REPRODUCTION IN PART OR AS A WHOLE WITHOUT THE WRITTEN PERMISSION OF PEABODY ENGINEERING IS PROHIBITED.

UNLESS OTHERWISE SPECIFIED:
DIMENSIONS ARE IN INCHES
TOLERANCES: ±1/4"
ANGULAR: ± .5°
ONE PLACE DECIMAL ± .250"
TWO PLACE DECIMAL ± .125"
THREE PLACE DECIMAL ± .063"

TANK MATERIAL: LLDPE
INNER TANK S/N:
OUTER TANK S/N:
CUSTOMER PO#

DO NOT SCALE DRAWING

	NAME	DATE
DRAWN	NRG	11/2/20
CHECKED		
ENG APPR.		
MFG APPR.		
Q.A.		

COMMENTS:

PEABODY engineering

PROJECT: SQUARE PROCHEM
CUSTOMER: PEABODY STANDARD
SITE/LOCATION: CORONA FOB
SALES ORDER#:

SIZE: B
DESC.: 140 GALLON 23" SQUARE PROCHEM TANK
REV.: -

SCALE: 1:15
LAST SAVED: Tuesday, February 8, 2022 1:47:58 PM
SHEET 1 OF 1

THE FOLLOWING DRAWINGS ARE CONCEPTUAL AND INTENDED FOR CLIENT REVIEW AND APPROVAL PURPOSES ONLY. THE DRAWINGS ARE AN ESTIMATION OF DESIGN INTENT. FINAL DESIGN, SUPPORTS AND FABRICATION METHODS SHALL BE DETERMINED UPON PRODUCT PRODUCTION. FINAL PRODUCT WILL SATISFY CONCEPTUAL DESIGN INTENT AND FUNCTION ADEQUATELY AS FABRICATED.